# ALBION 87-88

## PN32 Brass 3 Way Ball Valve

### *FEATURES:*

- Screwed BSP Parallel
- ISO Top Direct Mount
- PTFE Seals
- Temp -20˚C to 150˚C

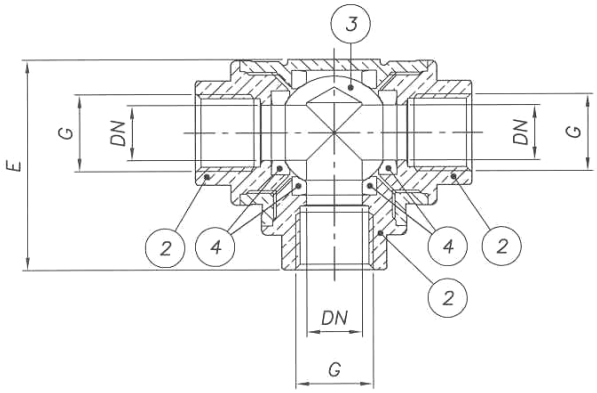


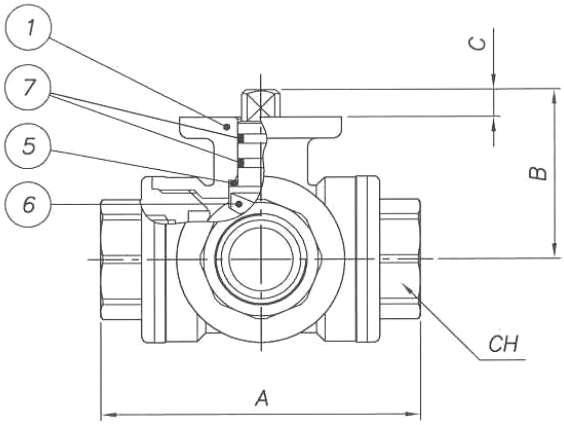


| N. | Part Name | Materials |
|---|---|---|
| 1 | Body | Brass CW 617N |
| 2 | End Connection | Brass CW 617N |
| 3 | Ball | Brass CW 617N Chrome Plated |
| 4 | Ball Seats | PTFE |
| 5 | Stem Seal | PTFE |
| 6 | Stem | Brass CW614N |
| 7 | O-Ring Stem | Viton |

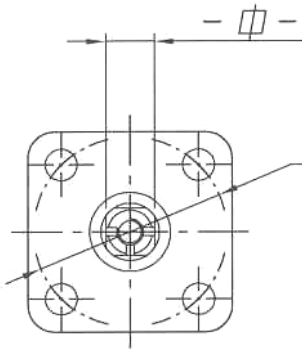

| DN | 1/4" | 3/8" | 1/2" | 3/4" | 1" | 1 1/4" | 1 1/2" | 2" |
|---|---|---|---|---|---|---|---|---|
| A | 75 | 75 | 75 | 85 | 103 | 114 | 130 | 160 |
| B | 40 | 40 | 40 | 54 | 60 | 69 | 90 | 101 |
| C | 7 | 7 | 7 | 11 | 11 | 11 | 15 | 15 |
| E | 59 | 59 | 59 | 67 | 81 | 96 | 108 | 135 |
| CH | 27 | 27 | 27 | 32 | 40 | 50 | 55 | 69 |
| ⌷ | 9 | 9 | 9 | 11 | 11 | 11 | 14 | 14 |
| Ø | 36 | 36 | 36 | 50 | 50 | 50 | 70 | 70 |
| Torque | 7 | 8 | 10 | 17 | 19 | 21 | 30 | 33 |
| Kgs | 0.69 | 0.73 | 0.82 | 1.04 | 1.74 | 2.70 | 4.32 | 8.37 |

| Technical Data | 1/4"-3/4" | 1" | 11/4" - 2" |
|---|---|---|---|
| Max Pressure: | 32 Bar | 16 Bar | 10 Bar |
| Working Temperature | -10˚C to +150˚C | -10˚C to +150˚C | -10˚C to +150˚C |

### Pressure / Temperature

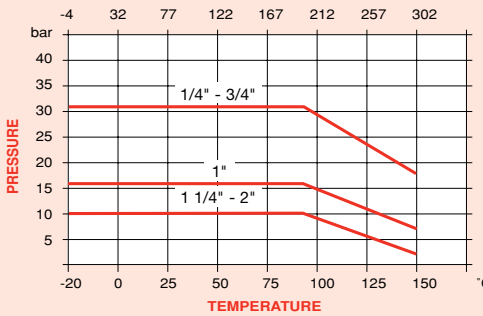


Dimensions in mm

Torque calculated at 16 bar water includes 25% safety add 25% for dry duty

*1.4.08 Issue 2*

This data sheet is designed as a guide and should not be regarded as wholly accurate in every detail. We reserve the right to amend the specification of any product without notice.